CHANNELMODULE REV 13

CHANNEL MODULE FAN PLATE REV 2;
.060, 16GAGE, COLD ROLLED STEEL;
GRAPHITE SANDTEX, PA-191-LT, LOW GLOSS, FINE TEXTURE, POLYESTER POWDER

CHASSIS;
.048, 18GAGE, COLD ROLLED STEEL;
GRAPHITE SANDTEX, PA-191-LT, LOW GLOSS, FINE TEXTURE, POLYESTER POWDER

COVER;
.048, 18GAGE, COLD ROLLED STEEL;
GRAPHITE SANDTEX, PA-191-LT, LOW GLOSS, FINE TEXTURE, POLYESTER POWDER

FRONT;
.075, 14GAGE, COLD ROLLED STEEL;
GRAPHITE SANDTEX, PA-191-LT, LOW GLOSS, FINE TEXTURE, POLYESTER POWDER;
PRINTABLE FACES:1

REAR;
.048, 18GAGE, COLD ROLLED STEEL;
GRAPHITE SANDTEX, PA-191-LT, LOW GLOSS, FINE TEXTURE, POLYESTER POWDER;
PRINTABLE FACES:1

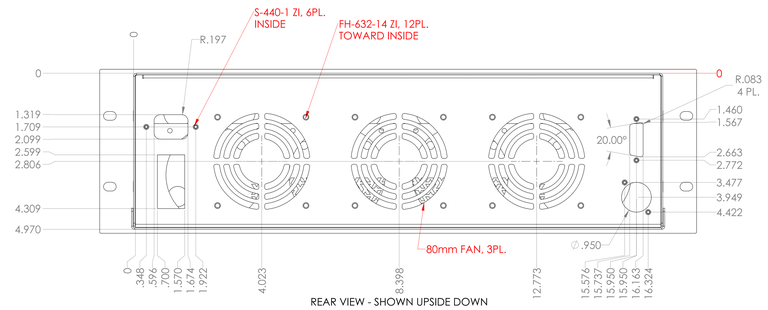

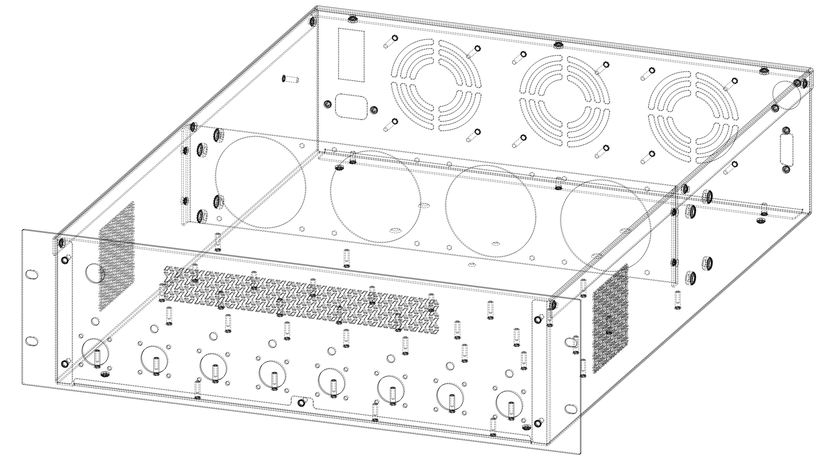

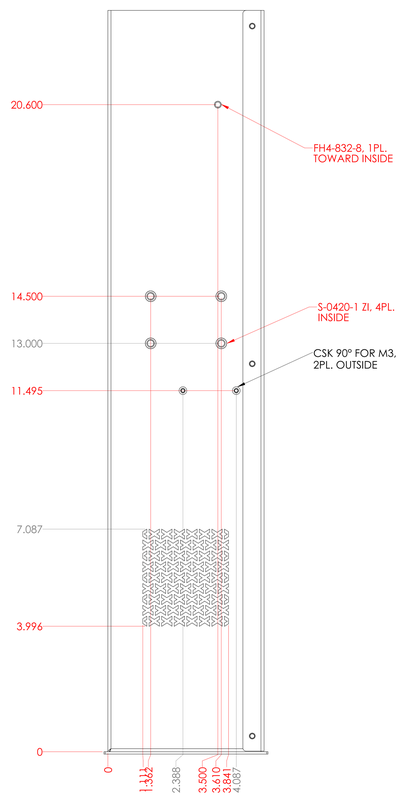

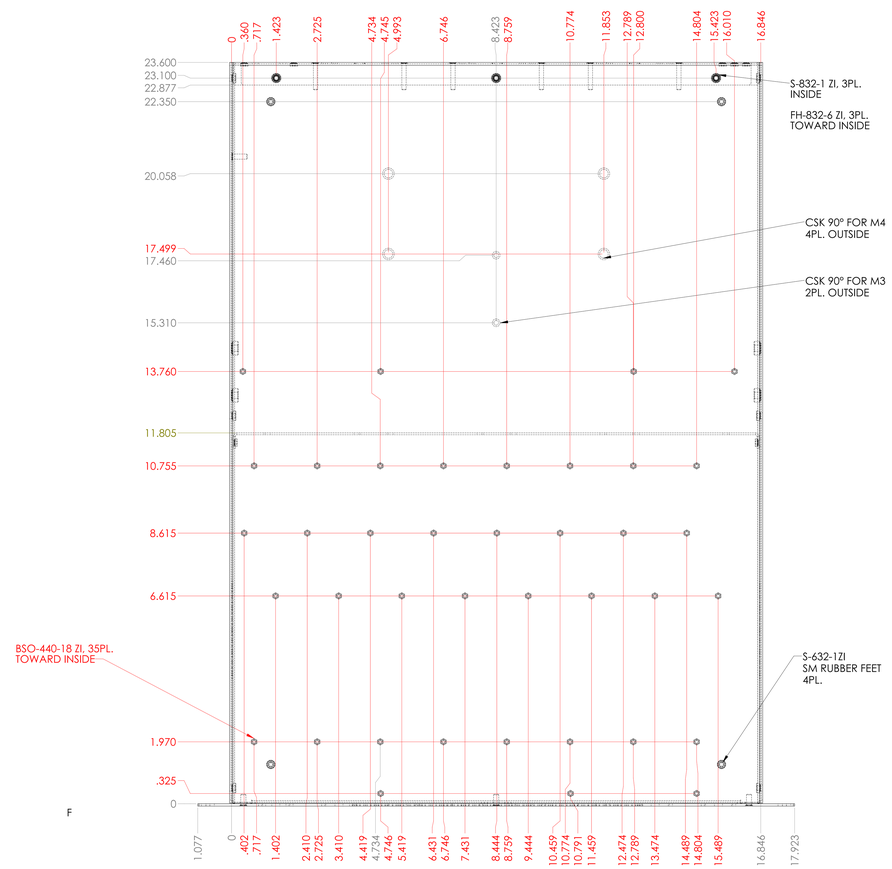

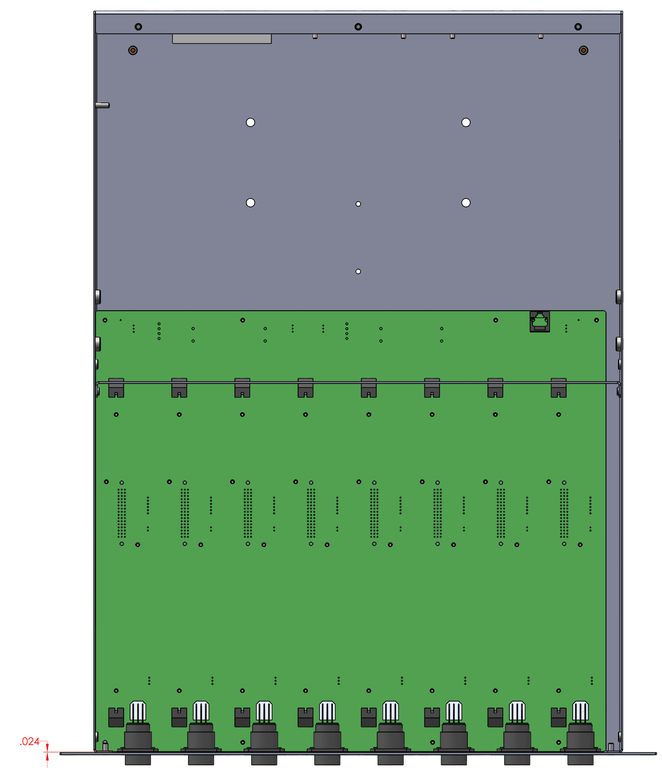

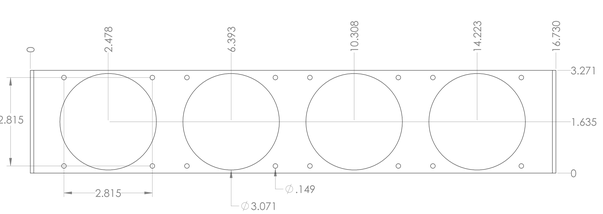

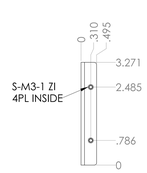

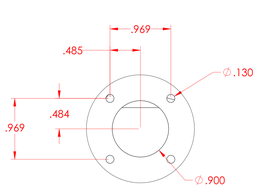
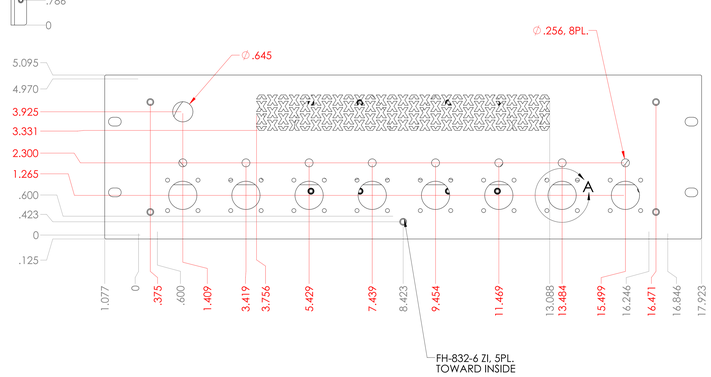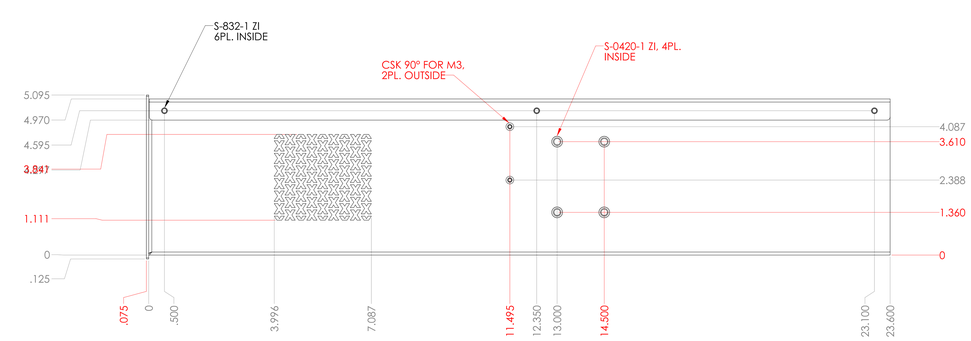
DETAIL A
SCALE 2 : 1
8PL.